NOTES:
1. MATERIAL: .0315 THICK, 1008 COLD ROLLED STEEL (A)
   #2 TEMPER (1/2 HARD)
   PER ETCO METAL CODE 2-2998.
2. POST ELECTROLESS NICKEL PLATE. (A)
3. PARTS ARE PRODUCED IN LOOSE PIECE FORM.

Part Number	Mat'l	Plating
3000M 292C2	Note 1	Note 2

Rev.	Description of Change/ SCN#	Date
A	Approved for Quote, Mat'l .0315 thk No.2 was .032 thk No.3, post-plate was pre-plate SCJ	4/03/23

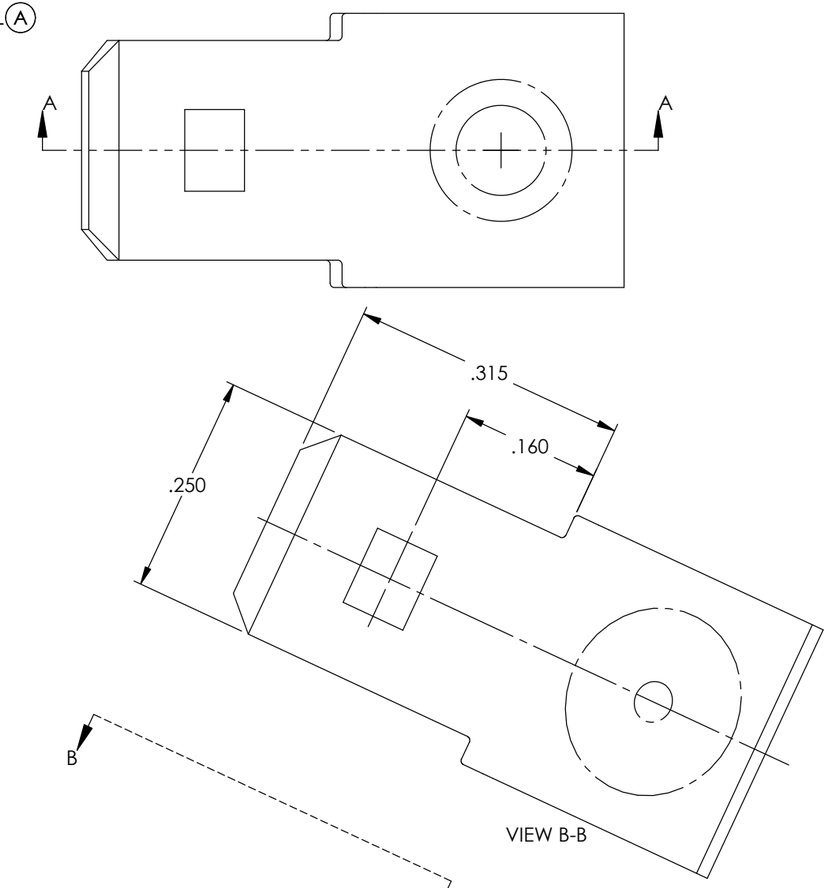

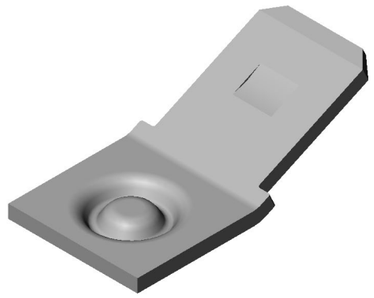

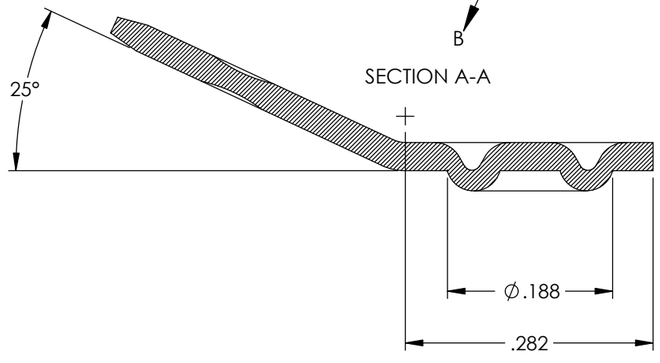

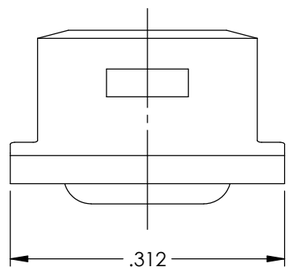

UNCONTROLLED COPY

THIRD ANGLE PROJECTION

TOLERANCES UNLESS OTHERWISE SPECIFIED
INCHES: .XX - ±.030
.XXX - ±.015
ANGLES: ±5°

TOOL NO. 1050

Title: Stationary Weld Male

DO NOT SCALE DWG.

Drawn By: S.Johnson

Date: 5/15/20

Design Control By: ETCO

Scale: 6X

Size B

Dwg. No.: 3000M 292C2 cust

ETCO Incorporated
Engineered Products
25 Bellows Street
Warwick, RI 02888
Phone: (401) 467-2400
Fax: (401) 467-9230
www.ETCO.com

THIS PRINT IS THE PROPERTY OF ETCO INCORPORATED. NO PART OF THIS DESIGN MAY BE USED IN ANY WAY WITHOUT WRITTEN CONSENT FROM ETCO INCORPORATED.