ITEM NO.	Part_Code	PART NUMBER	DESCRIPTION	QTY.
1	69579	7A-PN187	Feed Finger	1
2	***60529***	***8B-PN187-1***	***Die / Anvil***	***1***
3	***60695***	***8B-PN187-1-18***	***Die / Anvil***	***1***
4	***60854***	***8C-PN187-X***	***Bottom Shear Block***	***1***
5	69927	11-PN187	Plunger	1
6	***61883***	***12-PN187-1***	***Cut-off Punch***	***1***
7	***62710***	***13-PN187***	***Wire Rolling Tool***	***1***
8	***60699***	***13-PN187-18***	***Wire Rolling Tool***	***1***
9	63500	101-19	Casting	1
10	69859	169	Gib	2
11	63501	176-PN187	Guard	1
12	69624	176S-250	Guard Spacer	2
13	63502	205-PN187S	Base Plate	1
14	73952	231	Stripper Spring	2
15	76923	301-6	Shoulder Screw	1
16	73399	302-.160	Feed Finger Spacer	1
17	73400	304-.840	Feed Finger Spacer	1
18	76829	305-1	Feed Finger Arm	1
19	77639	306-TH	Feed Stop Arm	1
20	79304	307-21	Feed Finger Spring	1
21	74400	308-Finished	Feed Shaft	1
22	74402	310	Cam Return Spring	1
23	74403	311	Roll Pin	1
24	74404	312	Cam Taper Pin	1
25	63654	314L-9A-CP	Cam Body	1
26	74495	401-Finished	Brake Shaft	1
27	74496	402	Spring Retainer	1
28	63503	403-16BW	Brake Body	1
29	74673	404	Brake Cam	1
30	74674	405	Taper Pin	1
31	74675	406	Cotter Pin	1
32	74676	407	Brake Spring	1
33	63504	408-1.095	Brake Spacer	1
34	60268	612	Rear Guide	1
35	75710	1125-Finished	Cam Roller Bracket	1
36	75719	1142	Cam Roller Bearing	1
37	69441	1696	Wire Stop / Stripper	1
38	76186	1800	Stock Chute	1
39	77634	CS-110	Plunger Shank	1
40	66205	CS-265	Die Plate	1
41	60394	CS-1007	Front Guide	1
42	63506	McMaster-Carr #1095K11	1/8 NPT Grease Fitting	1
43	72069	McMaster Carr #98407A118	#8 E-Style Retaining Ring	2
44	63507	1.8_.50dp	Ø1/8" x 1/2" Dowel	4
45	62849	1.8_1.00dp	1/8" x 1" Dowel	2
46	63508	8-32_.38fh	#8-32 x 3/8" Flat Hd Cap Screw	2
47	63509	8-32_.38lh	#8-32 x 3/8" Low Hd Cap Screw	2
48	63161	8-32_.38sh	#8-32 x 3/8" Socket Hd Cap Screw	8
49	63164	8-32_.50sh	#8-32 x 1/2" Socket Hd Cap Screw	5
50	63473	10-32_.25sh	#10-32 x 1/4" Socket Hd Cap Screw	2
51	63056	10-32_.50sh	#10-32 x 1/2" Socket Hd Cap Screw	3
52	70293	10-32_.63sh	#10-32 x 5/8" Socket Hd Cap Screw	1
53	77396	10-32_1.25sh	#10-32 x 1 1/4" Socket Hd Cap Screw	1
54	63510	1.4_1.00dp	1/4 x 1" Dowel Pin	2
55	63511	1.4-20_.25ssf	1/4-20 x 1/4" Socket Hd Set Screw	2
56	63168	1.4-20_1.00sh	1/4-20 x 1" Socket Hd Cap Screw	2
57	63512	1.4-28 jn	1/4-28 Jam Nut	1
58	62184	1.4-28_.50sh	1/4-28 x 1/2" Socket Hd Cap Screw	1
59	63513	1.4-28_.75ss	1/4-28 x 3/4" Socket Set Screw	1
60	62622	1.2_.75shss	1/2" x 3/4" Socket Hd Shoulder Screw	1

Note

1) Items marked in ***"Bold Italic"*** *are high wear tooling.*

2) Use OEM replacement tooling only.

PN187S_S-18
79327

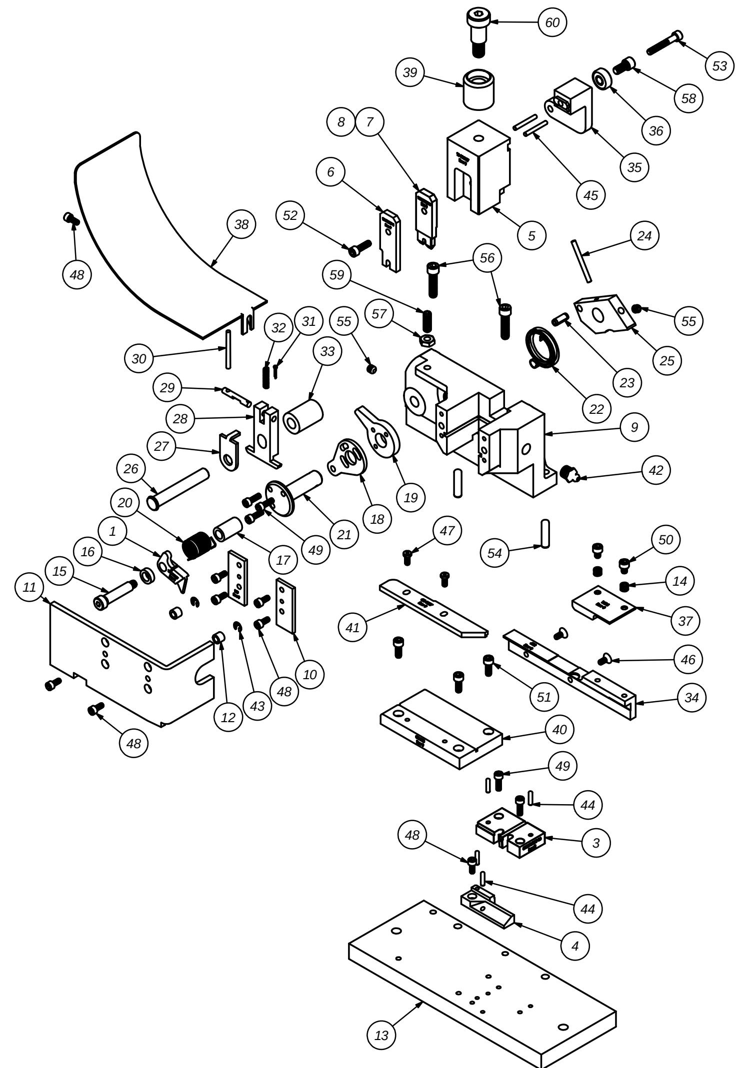

DO NOT SCALE DRAWING

UNLESS OTHERWISE SPECIFIED DIMENSIONS ARE IN INCHES. TOLERANCES ARE:

See Parts List

ETCO ENGINEERED PRODUCTS
25 BELLOWS STREET
WARWICK RI 02888 (401)-467-2400

PN187S-18

PN187S

ECC Applicator

PN187S_S-18

SCALE: 1:2

17Jan03

D

12/19/2012